
Software Performance Engineering in the DevOps World
September 26th – 30th 2016, Schloss Dagstuhl, Germany

# SPE meets DevOps: best friends or consensual enemies?

Catia Trubiani
Gran Sasso Science Institute (GSSI)
catia.trubiani@gssi.infn.it

# Gran Sasso Science Institute

GSSI is an international PhD school and a research center for advanced studies, see more details here: http://www.gssi.infn.it

I am involved in the research area for Computer Science

More details here: http://cs.gssi.infn.it/catia.trubiani

# Research interests

SPE: Software Performance Engineering

-> just happened during my PhD studies ;)

QFM: Quantitative Formal Methods

-> teaching a course at my current Institution ☺

SA: Software Architectures

-> received a best paper award in ECSA 2015

ML: Machine Learning

-> just for fun, a lot of work and no results yet ☹

# DevOps World – some buzzwords

[TR-DevOps-2015] Andreas Brunnert at Al. –
“Performance-oriented DevOps: A Research Agenda”, 2015.

B1: Antipatterns


B2: Awareness

B3: Traceability

B4: Adaptation

# B1: Performance Antipatterns

[TR-DevOps-2015]: *"…better understand and formalize the relationship between symptoms, indicators, and root-causes connected to performance antipatterns…"*

Key Question:

**What does it mean to use performance antipatterns in the DevOps world?**

# Challenges for Performance Antipatterns

- Formalization -> a logic-based formalization [SoSyM 2014] but <u>how can we specify antipatterns to reflect **DevOps concepts**?!</u>

- Ranking of detected antipatterns -> a priority-based strategy [JSS 2014] but <u>how can we rank antipatterns to reflect **DevOps priorities**?!</u>

[SoSyM 2014] V. Cortellessa, A. Di Marco, C. Trubiani, “An approach for modeling and detecting software performance antipatterns based on first-order logics”

[JSS 2014] C. Trubiani, A. Koziolek, V. Cortellessa, R. H. Reussner: ”Guilt-based handling of software performance antipatterns in palladio architectural models”

# B2: Performance Awareness

[TR-DevOps-2015]: *"Insights … of developers should be collected and exchanged with Ops… performance awareness by developers needs to be evaluated more extensive and improved"*


Key Question:

**What are the most common uncertainties in the DevOps world?**

# Challenges for Performance Awareness

- Identification of uncertain parameters -> Monte-Carlo based sampling approach [QoSA 2013] but is it efficient to sample **Dev** parameters and what's the impact on **Ops** results?!

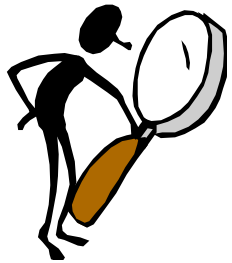

- Providing best and worst values for software/hardware elements -> sensitivity analysis [QoSA 2014] but is it helpful for **DevOps variabilities**?!


[QoSA 2013] C. Trubiani, I. Meedeniya, V. Cortellessa, A. Aleti, L. Grunske: "Model-based performance analysis of software architectures under uncertainty"

[QoSA 2014] L. Etxeberria, C. Trubiani, V. Cortellessa, G. Sagardui: "Performance-based selection of software and hardware features under parameter uncertainty"

# B3: Performance Traceability

[TR-DevOps-2015]: *"Current performance modeling formalisms barely ensure the traceability between the running system and model instances. With reference to DevOps, more traceability information should be stored within the models"*

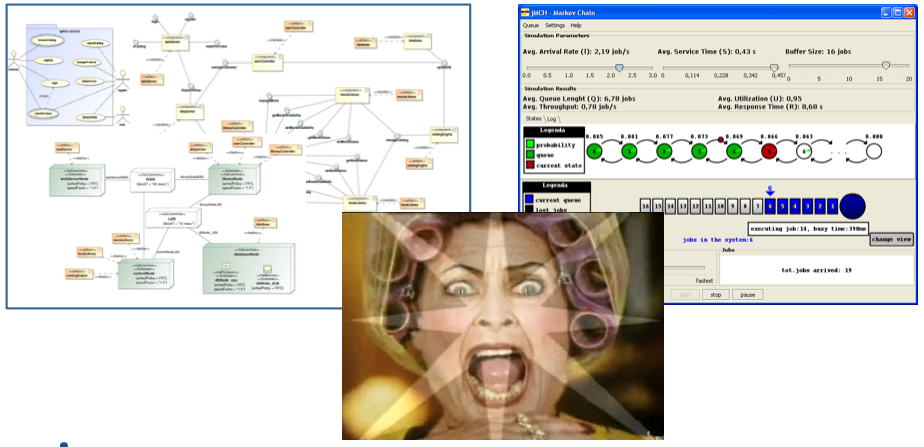

<u>Key Question:</u>

**What is the traceability information needed to enable SPE in the DevOps world?**

# Challenges for Performance Traceability

- Identification of traceability links -> tool to specify traceability [ECSA 2015] but <u>what is the traceability between **Dev** elements and **Ops** results?!</u>

```
{HWdbDataHost, HWwan} affectExactly
    {UdbDataHost, QLdbDataHost, WTdbDataHost};
{SWuVP, SWdbData} affectAtLeast {RTuVP, THuVP};
{SWuVP, DYsetVP} affectAtMost
    {RTuVP, THuVP, QLdbDataHost};
{SWdbData, DYsetVP} affectAtMost
    {RTuVP, THuVP, QLdbDataHost};
```

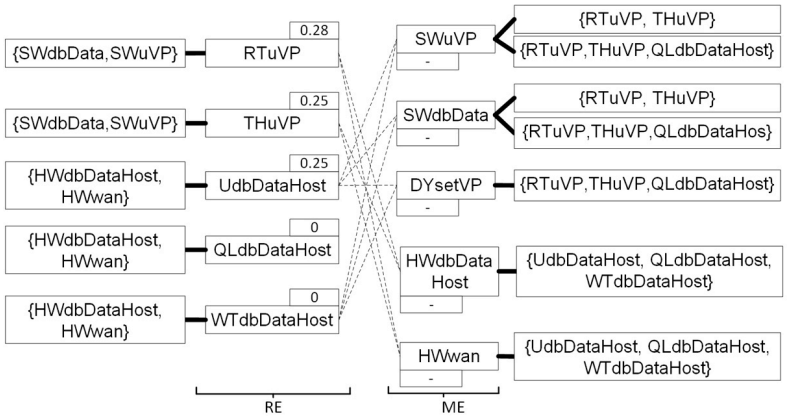


[ECSA 2015] C. Trubiani, A. Ghabi, A. Egyed: ”Exploiting Traceability Uncertainty Between Software Architectural Models and Performance Analysis Results”

# B4: Performance Adaptation

[TR-DevOps-2015]: *"it needs to be emphasized that EA architectures need to be specifically designed to handle dynamically (de-)allocated resources during runtime"*

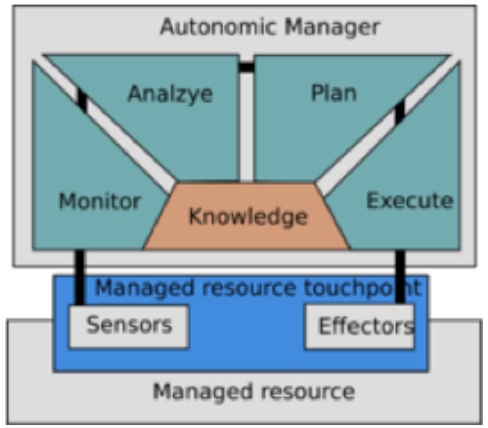


Key Question:

**What does it mean to perform self-adaption of software systems in the DevOps world?**

# Challenges for Performance Adaptation

- System configuration fulfilling performance requirements at run-time -> symbolic approach based on QN [SEAMS 2016] but <u>what are the most suitable adaptations in the **DevOps** world?</u>

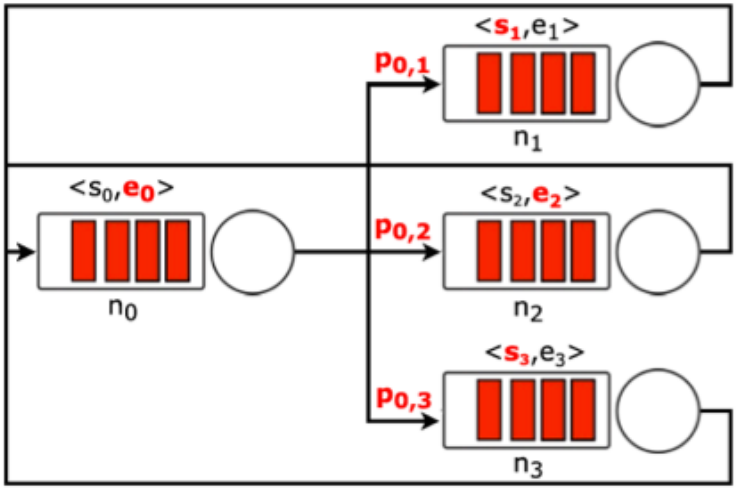


[SEAMS 2016] E. Incerto, M. Tribastone, C. Trubiani: ”Symbolic performance adaptation”

# Expectations from the seminar

My proposal is to discuss the following key topics on Performance:

Antipatterns

Awareness

Traceability

Adaptation

…anything else missing?!

# THANK YOU!

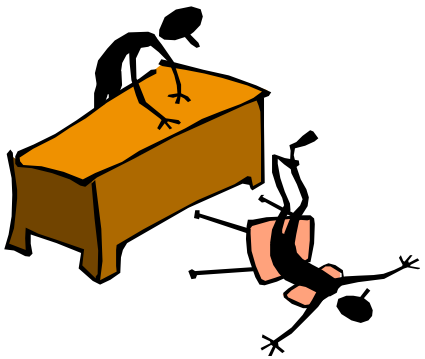

**Questions**

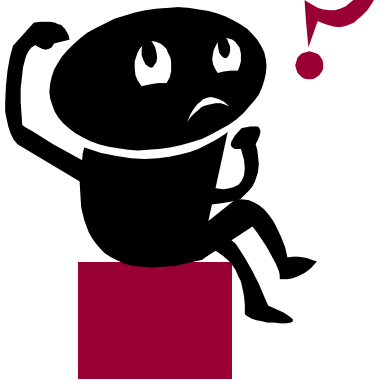

catia.trubiani@gssi.it

Announcements:

**International Conference on Performance Engineering (ICPE)**, 22-26 April 2017, L'Aquila, Italy – https://icpe2017.spec.org

Propose a new **Workshop** - deadline: November 5, 2016